PART NO.
DCAW163

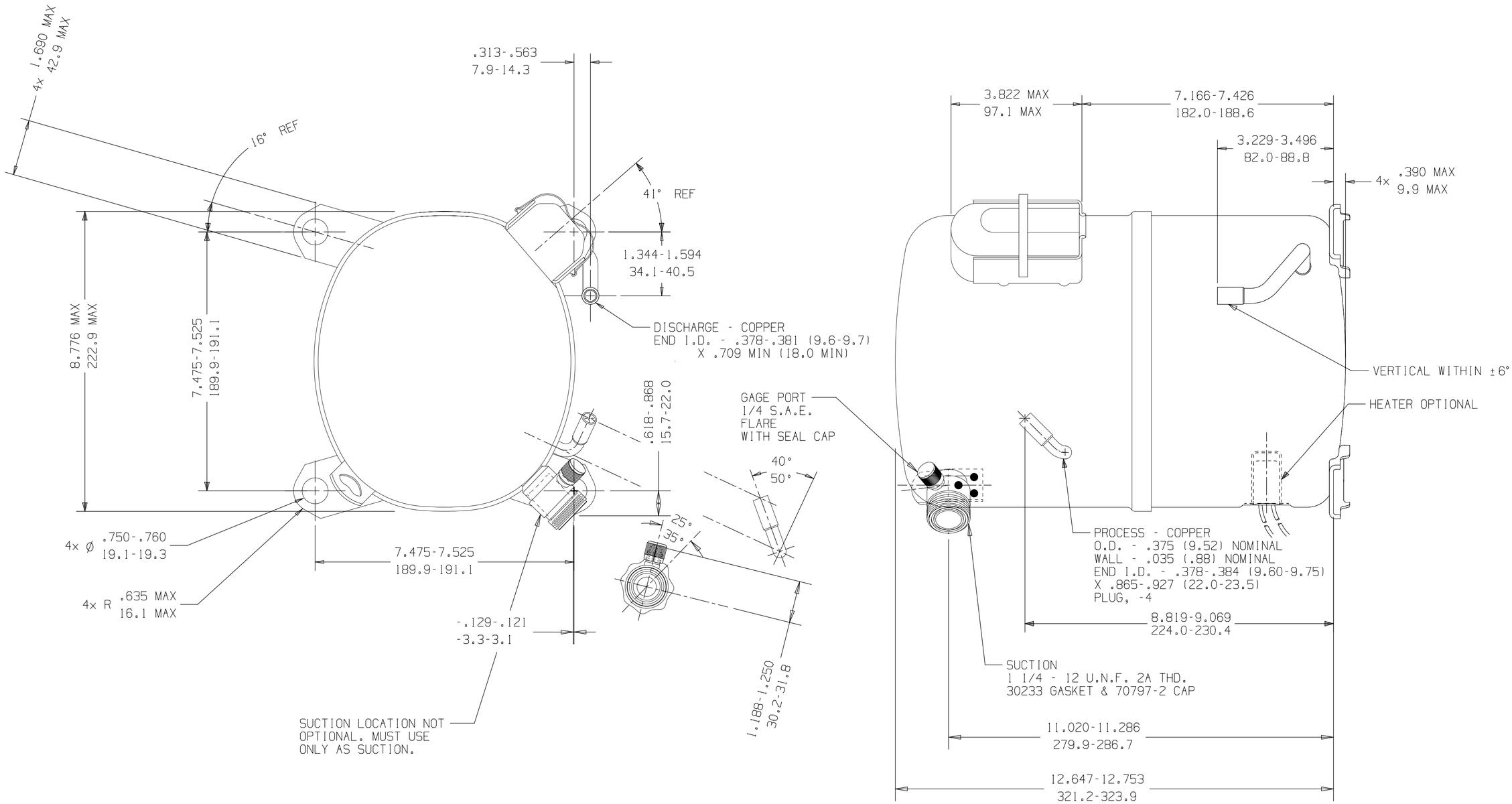

DIMENSIONING = INCHES / MILLIMETERS OR INCHES (MILLIMETERS)

Q.A. SYMBOLS
✡ = CATEGORY I
▲ = CATEGORY II
■ = CATEGORY III
= CATEGORY IV

AW

REL.	CHANGE	DATE
LT LC	#243023-010	

THIS DRAWING OR PRINT IS THE PROPERTY OF TECUMSEH PRODUCTS COMPANY (TECUMSEH) AND CONTAINS INFORMATION BELONGING TO TECUMSEH. RECIPIENT BY ACCEPTANCE OF THIS SPECIFIC CONDITION THAT NEITHER IT NOR ANY PERSON OR ENTITY TO WHOM THEREON OR DISCLOSED THEREIN SHALL USE THE INFORMATION CONTAINED HEREIN OR OTHERS WITHOUT THE EXPRESS OF TECUMSEH AND THAT COPIES OF INFORMATION ONLY AS EXPRESSLY AND SPECIFICALLY PERMITTED WITHIN A WRITTEN AGREEMENT AND NOT OTHERWISE. (II) SHALL NOT BE REPRODUCED IN ANY FORM OR MANNER OR TO ANY EXTENT WITHOUT TECUMSEH'S PRIOR EXPRESS AND SPECIFIC WRITTEN PERMISSION. (IV) SHALL BE RETURNED BY THE RECIPIENT TECUMSEH WITHIN 30 DAYS OF THE LATTER'S REQUEST PROMPTLY AFTER SUCH REQUEST IS MADE.

DO NOT SCALE THIS DRAWING. MATERIALS MUST NOT BE MAGNETIZED AS RECEIVED OR AFTER COMPRESSOR ASSEMBLY.

DIS.CODE

NAME SALES COMPRESSOR

DWN.	CK.	APR.	SCALE
T.M.G 21SEPT04			1"=2"

THIS PRINT SUPERSEDES ALL PRINTS PRIOR TO

TECUMSEH PRODUCTS CO.
TECUMSEH, MICHIGAN

MATERIAL

PART NO. DCAW163

BANNER

Sheet 1 of 1 Date: 21-Sep-04 Time: 13:20